ABSTRACT

This project presents an IoT-enabled smart leakage detection system designed for commercial buildings to identify water and gas leaks in real-time, thereby preventing property damage, resource wastage, and safety hazards. The system utilizes an ESP32 microcontroller as the central processing unit, interfaced with water leak sensors (e.g., resistive probes, soil moisture sensors) and gas sensors (e.g., MQ-2, MQ-5) . Upon detecting a leak, the system triggers local audio-visual alarms (buzzer/LEDs), sends immediate notifications via Wi-Fi (MQTT/Telegram), and can automatically shut off solenoid valves to isolate the supply .

Keywords:
Internet of Things (IoT), ESP32 Microcontroller,Water Leak Detection ,Gas Leak Detection,Smart Building Monitoring,MQ-5 Gas Sensor

TABLE OF CONTENTS

Acknowledgement I
Abstract II
Table of Contents .....III-IV
List of Figures 1
List of Tables 2

Chapter 1: Introduction 3-10
1.1 Introduction 3
1.2 Motivation 4
1.3 Objectives of the Project 5
1.4 Background 6
1.5 Organization of the Thesis 7
1.6 Summary 10

Chapter 2: Literature Review 11-19
2.1 Introduction 11
2.2 Traditional Surveillance Systems 12
2.3 Smart Leak Detection Systems 13
2.4 Role of Sensors in Leak Detection 14
2.5 Gap Analysis in Existing Systems 15
2.6 Gap Analysis 16
2.7 Summary 17-19

Chapter 3: Design Methodology 19-30
3.1 Overview 19
3.2 System Requirements 20

3.3 Hardware Architecture 21
3.4 Software Workflow 22
3.5 Block Diagram 23
3.6 Implementation Strategy 24
3.7 Hardware Requirements 25
3.8 Software Requirements 26
3.9 Circuit Diagram 27
3.10 Summary 28-30

Chapter 4: Hardware Components 30-42
4.1 Introduction ..... .30
4.2 ESP32 Development Module 31
4.3 Water Leak Sensor 34
4.4 MQ-5 Gas Sensor 36
4.5 Water Flow Sensor 38
4.6 Touch Sensor 39
4.7 Solenoid Valve 42

Chapter 5: Results and Conclusion 43-57
5.1 Results 43
5.2 Conclusion 45
5.3 Code 46
5.4 Project 52
5.5 Output ..... .53
5.6 Limitations of the System 54
5.7 Future Scope 55

References 57

LIST OF FIGURES

Figure No.	Title	Page No.
Figure 3.5	Block Diagram	22
Figure 3.9	Circuit Diagram	26
Figure 4.2	ESP32-DEV Module	31
Figure 4.3	Water Leak Sensor	35
Figure 4.4	MQ5 Gas Sensor	36
Figure 4.5	Water Leak Sensor	38
Figure 4.6	Touch Sensor	39
Figure 4.7	Solenoid Valve	41
Figure 5.4	Project	52
Figure 5.5	Output	53

LIST OF TABLES

Table No.	Title	Page No.
Table no 3.7	Components Overview	23-24
Table no 3.8	Software Used	25

CHAPTER 1

INTRODUCTION

1.1INTRODUCTION

Water is one of the most essential resources for daily life, yet it is often wasted due to unnoticed leaks in residential, commercial, and industrial environments. Water leakage can occur in pipelines, storage tanks, or appliances, leading to significant water loss and increased utility costs. In many cases, these leaks remain undetected for long periods, causing not only wastage but also damage to infrastructure and surrounding areas.

A Water Leak Detection System is designed to identify and alert users about the presence of leaks at an early stage. By using sensors and smart monitoring techniques, such systems can continuously track moisture levels or water flow and provide real-time alerts. This helps in reducing water wastage, preventing structural damage, and ensuring efficient resource management.

With advancements in technology, modern leak detection systems are increasingly integrated with IoT (Internet of Things), enabling remote monitoring and control. These systems can notify users through mobile applications or

alarms, making them highly effective in both small-scale and large-scale applications.

In addition to detection, modern water leak systems also contribute to sustainable resource management by promoting responsible water usage. By providing continuous monitoring and data insights, these systems help users understand consumption patterns and identify inefficiencies in plumbing systems. This supports conservation efforts and aligns with smart building initiatives, where automation and data-driven decision-making improve operational efficiency. As urbanization increases, intelligent leak detection solutions become essential for ensuring long-term environmental sustainability and infrastructure resilience.

1.2 MOTIVATION

The primary motivation behind developing a Water Leak Detection System is the growing concern over water scarcity and resource conservation. In many regions, water is becoming increasingly limited, making it crucial to prevent unnecessary losses. Even minor leaks, when left unattended, can lead to the loss of thousands of liters of water over time.

Another important motivation is the prevention of property damage. Water leaks can weaken building structures, damage walls and floors, and even affect

electrical systems, leading to hazardous situations. Early detection can significantly reduce repair costs and improve occupant safety.

Additionally, manual monitoring methods are inefficient and unreliable, especially in large buildings or industrial setups. This creates a need for automated systems that can operate continuously without human intervention, ensuring accurate and timely detection of leaks.

1.3 OBJECTIVE OF THE PROJECT

The main objective of this project is to design and develop an efficient Water Leak Detection System that can detect leaks in real time and alert users immediately. The system aims to minimize water wastage by identifying leaks at an early stage and enabling quick corrective action.

Another objective is to ensure user safety and prevent damage to infrastructure. By integrating sensors and alert mechanisms such as buzzers or notifications, the system provides instant warnings when a leak is detected. This helps in avoiding accidents and reducing maintenance costs.

Furthermore, the project aims to create a cost-effective and easy-to-implement solution suitable for homes, offices, and industries. The system should be reliable, scalable, and capable of continuous operation with minimal maintenance.

1.4 BACKGROUND

Water leak detection has been a concern for many years, especially in urban areas where complex plumbing systems are used. Traditional methods involved manual inspection or basic monitoring techniques, which were inefficient in detecting hidden leaks. These methods often resulted in delayed detection and increased damage.

With advancements in sensor technologies, modern systems now use moisture sensors, flow sensors, and pressure sensors to detect leaks accurately. These sensors can be connected to microcontrollers, enabling automated monitoring and response.

The integration of wireless communication technologies has further improved system efficiency. In recent years, IoT-based solutions have gained popularity, allowing users to monitor water usage and leak status remotely. These systems provide real-time data and alerts, making them highly effective in preventing water loss and ensuring better resource management.

The advent of embedded systems and IoT has transformed leak detection into intelligent, automated solutions capable of real-time monitoring, instant alerts, remote access, and data analysis. A key technology enabling such systems is the ESP32 microcontroller, which offers

built-in Wi-Fi, processing capability, and multiple interfaces in a cost-effective platform.

The ESP32 can interface with various sensors such as water leak sensors, moisture sensors, and flow sensors. When a leak is detected, it can trigger alerts through buzzers, LEDs, or mobile notifications. Additionally, it can store data for analysis, helping users identify usage patterns and inefficiencies.

This technological advancement forms the foundation of the proposed system, making it reliable, scalable, and suitable for residential, commercial, and industrial applications.

1.5 ORGANIZATION OF THE THESIS

This thesis is organized into a series of systematically structured chapters to present the design and development of the Water Leak Detection System in a clear and logical manner. Each chapter focuses on a specific aspect of the project, progressing from fundamental concepts to implementation, testing, and evaluation.

Chapter 1 introduces the project by explaining the need for an efficient water leak detection system. It outlines the motivation, objectives, background, and overall structure of the thesis, providing a foundation for understanding the

scope of the work.

- Chapter 2 presents a comprehensive review of existing water leak detection methods and technologies. It discusses both traditional techniques and modern IoT-based systems, highlighting their advantages and limitations.

Chapter 3 describes the system design and architecture. It includes the block diagram, workflow, and interaction between components such as the ESP32 microcontroller, sensors, buzzer, and communication modules.

Chapter 4 focuses on the hardware components used in the system. It explains each component, including sensors, microcontroller, power supply, and interfacing modules, along with their specifications and working principles.

Chapter 5 deals with the software implementation. It covers the development environment, programming logic, and algorithms used for leak detection, data processing, and alert generation.

Chapter 6 explains the implementation and testing of the system. It discusses how the system is assembled, integrated, and tested under various conditions to evaluate its performance and reliability.

Chapter 7 highlights the applications and advantages of the proposed system. It explores its usage in residential,

commercial, and industrial environments, along with its benefits such as water conservation and cost savings.

Chapter 8 discusses the future scope and possible enhancements of the system, including advanced features like cloud integration, mobile applications, and automated control mechanisms.

Chapter 9 concludes the thesis by summarizing the overall work, key findings, and achievements of the project.

Chapter 10 provides the references used throughout the project, followed by appendices that include source code, circuit diagrams, and additional supporting materials.

1.6 SUMMARY

In this chapter, a detailed introduction to the Water Leak Detection System has been presented, covering its motivation, objectives, background, and overall structure. The importance of efficient water management has been emphasized, highlighting the need for early detection of leaks to prevent water wastage and infrastructure damage.

The chapter also discussed how modern technologies, particularly IoT and embedded systems, have improved the efficiency and reliability of leak detection systems. The use of the ESP32 microcontroller, along with various sensors and alert mechanisms, provides a smart and automated

solution for real-time monitoring.

Overall, this chapter establishes a strong foundation for the project by clearly defining its purpose and scope. It sets the stage for the subsequent chapters, which will explore the design, implementation, and evaluation of the proposed system in detail

CHAPTER 2

LITERATURE REVIEW

2.1 INTRODUCTION

Water leak detection systems have become increasingly important due to rising concerns about water conservation, infrastructure safety, and economic losses. Leakage in pipelines, storage tanks, and plumbing systems often goes unnoticed, leading to significant water wastage and structural damage. Traditional monitoring techniques rely on manual inspection, which is inefficient and incapable of providing real-time alerts.

With advancements in embedded systems and IoT technologies, leak detection systems have evolved into smart and automated solutions. These systems use sensors, microcontrollers, and communication modules to continuously monitor water flow and detect abnormal conditions. This enables early detection and immediate action, reducing damage and conserving resources.

In recent years, rapid urbanization and increasing demand for water have made efficient water management systems a necessity. Leakage not only wastes valuable water resources but also increases operational costs for industries

and municipalities. In large buildings and underground pipelines, detecting leaks manually becomes extremely difficult.

Smart leak detection systems overcome these challenges by providing continuous monitoring and early warning mechanisms. These systems can identify even minor leaks before they escalate into major problems. By combining sensing technology with communication systems, they ensure timely intervention and reduce both environmental and financial losses.

This chapter reviews existing water leak detection methods, compares traditional and modern techniques, and highlights the need for an efficient IoT-based solution.

2.2 TRADITIONAL SURVEILLANCE SYSTEMS

Traditional leak detection methods include manual inspection, pressure monitoring, and acoustic detection. Manual inspection involves checking pipelines physically, which is time-consuming and unreliable. Pressure-based systems detect leaks by identifying drops in pressure, but they require complex calibration and may miss small leaks.Acoustic methods detect sound waves generated by leaks, but they require expensive equipment and skilled operators. These systems are not suitable for widespread use due to high costs and complexity. Another major limitation is their dependency on human involvement. These methods cannot provide continuous monitoring or real-time alerts, making them inefficient for modern applications. They also lack data storage and analysis capabilities.

Traditional leak detection methods include manual inspection, pressure monitoring, and acoustic detection. In manual inspection, maintenance personnel check pipelines and tanks periodically for visible leaks. While simple, this method is time-consuming and unreliable, especially in large-scale systems.

Pressure-based methods detect leaks by observing drops in pressure within pipelines. However, these systems require complex calibration and may not detect small leaks accurately. Acoustic methods use sound waves to identify leak points, but they are expensive and require specialized equipment. Overall, traditional methods lack real-time monitoring and automation, making them inefficient for modern applications.

2.3 Smart Leak Detection Systems

Modern leak detection systems utilize IoT and embedded technologies to provide real-time monitoring and alerts. These systems integrate sensors such as water leak sensors, flow sensors, and moisture sensors with microcontrollers like ESP32 or Arduino.

When a leak is detected, the system can trigger alarms, send notifications, or even shut off water supply automatically. Cloud integration allows users to monitor the system remotely using mobile apps or web dashboards.

These systems are more efficient, accurate, and scalable compared to traditional methods, making them suitable for residential, commercial, and industrial use.

Smart systems also enable data-driven decision-making by collecting and analyzing water usage patterns. This helps in identifying inefficiencies, detecting unusual consumption trends, and improving overall system performance. Integration with cloud platforms allows data to be accessed from anywhere, making monitoring more convenient.

Another advantage is scalability. These systems can be easily expanded by adding more sensors and nodes, making them suitable for both small homes and large industrial plants. Their flexibility and adaptability make them a preferred choice for modern infrastructure.

Advanced systems may also use pressure sensors and ultrasonic sensors to enhance detection accuracy. Pressure sensors help identify sudden drops in pressure, indicating possible leaks, while ultrasonic sensors detect sound waves generated by leaking water.

Sensor calibration and placement play a crucial role in system performance. Proper positioning ensures accurate detection and minimizes false alarms. Combining different types of sensors creates a more robust and reliable detection system.

2.4 Role of Sensors in Leak Detection

Sensors play a critical role in detecting leaks accurately.

Water leak sensors detect the presence of water where it should not be, while flow sensors measure the rate of water flow in pipes.

Moisture sensors can detect dampness in walls or floors, indicating hidden leaks. Gas sensors (optional) can be integrated for detecting gas leaks, enhancing system safety. Sensors play a critical role in detecting leaks accurately. Water leak sensors detect the presence of water where it should not be, while flow sensors measure the rate of water flow in pipes.

Moisture sensors can detect dampness in walls or floors, indicating hidden leaks. Gas sensors (optional) can be integrated for detecting gas leaks, enhancing system safety.

The combination of multiple sensors improves detection accuracy and reduces false alarms, making the system more reliable.

2.5 Gap Analysis in Existing Systems

Despite advancements, existing systems have several limitations. Many commercial solutions are expensive and require subscription-based cloud services. They also depend heavily on internet connectivity.

Some systems lack scalability and cannot be easily customized. Others fail to provide offline functionality, making them unsuitable for remote areas.

The proposed Water Leak Detection System addresses these gaps by providing a low-cost, scalable, and IoT-enabled solution with real-time alerts and optional offline operation.

Another major issue in existing systems is energy consumption.

Many solutions require continuous power supply, making them unsuitable for remote or rural areas. Additionally, some systems lack user-friendly interfaces, making them difficult to operate for non-technical users.

The proposed system addresses these challenges by offering a simple, low-power, and easy-to-use solution. It focuses on affordability and accessibility while maintaining efficiency and reliability.

2.6 GAP ANALYSIS IN EXISTING SYSTEMS

Despite the availability of various water leak detection systems, several limitations still exist that reduce their effectiveness in real-world applications. Many traditional systems rely heavily on manual monitoring or basic sensing techniques, which are not capable of providing real-time alerts. This delay in detection often results in significant water loss, increased repair costs, and potential structural damage. Additionally, these systems lack automation and cannot operate continuously without human intervention, making them inefficient for large-scale or critical environments.

Modern IoT-based systems have improved functionality, but they also come with certain drawbacks. A major issue is their dependency on stable internet connectivity and cloud platforms for monitoring and alerts. In areas with poor network availability, these systems may fail to function

effectively. Moreover, many commercial solutions are expensive and require subscription-based services, which limits their accessibility for small-scale users or budget-constrained applications. Another concern is data privacy, as sensitive information is often stored on external servers.

Furthermore, existing systems often lack scalability and flexibility. Many are designed for specific applications and cannot be easily modified or expanded. High power consumption is another limitation, especially for systems that operate continuously, making them unsuitable for remote or battery-powered environments. Some systems also suffer from inaccurate detection due to poor sensor calibration or reliance on a single type of sensor, leading to false alarms or missed detections.

The proposed Water Leak Detection System addresses these gaps by offering a low-cost, energy-efficient, and scalable solution. It integrates multiple sensors with an ESP32 microcontroller to provide real-time monitoring and instant alerts. The system can operate independently with minimal reliance on external networks, making it suitable for both urban and remote applications. Its simple design, affordability, and adaptability make it a practical and effective alternative to existing solutions.

2.7 SUMMARY

This chapter has presented a comprehensive review of existing water leak detection systems, highlighting the

transition from traditional manual methods to modern smart and IoT-based solutions. It discussed various techniques such as manual inspection, pressure monitoring, and acoustic methods, along with their limitations in terms of efficiency, cost, and lack of real-time response. The role of advanced technologies, including embedded systems and sensors, was also emphasized in improving detection accuracy and enabling continuous monitoring.

The chapter further explored the importance of different sensors used in leak detection systems and how their integration enhances system reliability. It also examined modern smart systems that provide automation, remote monitoring, and data analysis capabilities. However, despite these advancements, several gaps still exist, such as high cost, dependence on internet connectivity, lack of scalability, and high power consumption.

Based on the analysis, it is evident that there is a need for a cost-effective, reliable, and energy-efficient solution that can operate in both online and offline environments. The proposed Water Leak Detection System aims to address these challenges by utilizing an ESP32-based embedded system with real-time monitoring and alert capabilities. This chapter provides a strong foundation for the next chapter, which focuses on the design and implementation of the proposed system.

CHAPTER 3
DESIGN METHODOLOGY

3.1 OVERVIEW

The design methodology of the Water Leak Detection System focuses on developing a reliable, cost-effective, and real-time monitoring solution to detect water leakage and prevent potential damage. Water leakage is a major issue in residential, commercial, and industrial environments, often leading to resource wastage, increased expenses, and safety hazards. This project aims to address these challenges by using an embedded system based on the ESP32 microcontroller, which enables continuous monitoring and immediate alert generation when a leak is detected.The system is designed to integrate multiple sensors, such as water leak sensors and flow sensors, to accurately identify abnormal conditions in water distribution systems. When a leak is detected, the system activates alert mechanisms such as buzzers and LEDs, and can also send notifications through IoT platforms for remote monitoring. The overall approach ensures minimal human intervention, making the system efficient and user-friendly.

3.2 SYSTEM REQUIREMENTS

The system requirements for the Water Leak

Detection System are defined to ensure reliable performance, accuracy, and efficiency in detecting leaks and generating timely alerts. The primary functional requirement of the system is to continuously monitor water-related conditions using sensors and detect any abnormal presence of water or irregular flow. The system must respond immediately when a leak is detected by activating alert mechanisms such as a buzzer and LED indicators. Additionally, it should support real-time monitoring and, if required, provide remote notifications using Wi-Fi connectivity.

From a hardware perspective, the system requires essential components such as the ESP32 microcontroller, water leak sensor, flow sensor, buzzer, LEDs, and a stable power supply. The ESP32 acts as the central processing unit, interfacing with all sensors and output devices.

The sensors must be sensitive and reliable enough to detect even small leaks, while the alert components should provide clear and immediate feedback to the user. Proper wiring, voltage regulation, and compatibility between components are also important to ensure smooth operation.

3.3 HARDWARE ARCHITECTURE

The hardware architecture of the Water Leak Detection System is designed to ensure efficient and reliable operation by integrating all essential components around the ESP32

microcontroller, which serves as the central control unit. The system uses sensors such as a water leak sensor to detect the presence of water in unwanted areas and a flow sensor to monitor water usage in pipelines. These sensors are connected to the GPIO pins of the ESP32, allowing it to continuously receive and process real-time data. When a leak or abnormal condition is detected, the ESP32 activates output devices like a buzzer for audible alerts and LEDs for visual indication. A stable power supply is provided to ensure smooth functioning of all components, and proper wiring ensures effective communication between them. The overall design is modular and compact, making it easy to implement, maintain, and expand for future enhancements such as additional sensors or IoT-based monitoring features. The hardware architecture of the Water Leak Detection System is designed to ensure efficient, reliable, and real-time operation by integrating all essential components around the ESP32 microcontroller, which acts as the central processing unit. The system utilizes sensors such as a water leak sensor to detect the presence of water in undesired areas and a flow sensor to monitor the rate of water flow within pipelines. These sensors are interfaced with the GPIO pins of the ESP32, enabling continuous data acquisition and monitoring. The ESP32 processes the incoming signals and compares them with predefined conditions to identify any abnormal behavior indicating a leak.

3.4 SOFTWARE WORKFLOW

The software workflow of the Water Leak Detection System is designed to ensure continuous monitoring, quick response, and reliable operation. The system is programmed using the Arduino IDE, where the code initializes all the hardware components such as sensors, buzzer, LEDs, and communication modules. At the start, the ESP32 sets up the GPIO pins, establishes serial communication for debugging, and configures any required libraries for sensor interfacing and Wi-Fi connectivity.

During operation, the system continuously reads input data from the water leak sensor and flow sensor. These sensor values are analyzed in real time and compared with predefined threshold conditions to determine whether a leak has occurred. If the system detects abnormal conditions, such as the presence of water in an unintended area or irregular water flow, it immediately triggers an alert. The buzzer is activated to provide an audible warning, and LEDs are used to indicate the system status visually. If IoT functionality is enabled, the ESP32 can also send notifications to a mobile device or web platform through Wi-Fi.

To improve system efficiency and reliability, the software includes features such as delay mechanisms and condition checks to prevent repeated or false triggering from the same event. Error handling routines are implemented to manage issues such as sensor failure or communication errors. The workflow is designed to be simple, responsive, and scalable, allowing easy integration of additional features like data logging, cloud storage, or automatic water shut-off systems in future enhancements.

3.5 BLOCK DIAGRAM

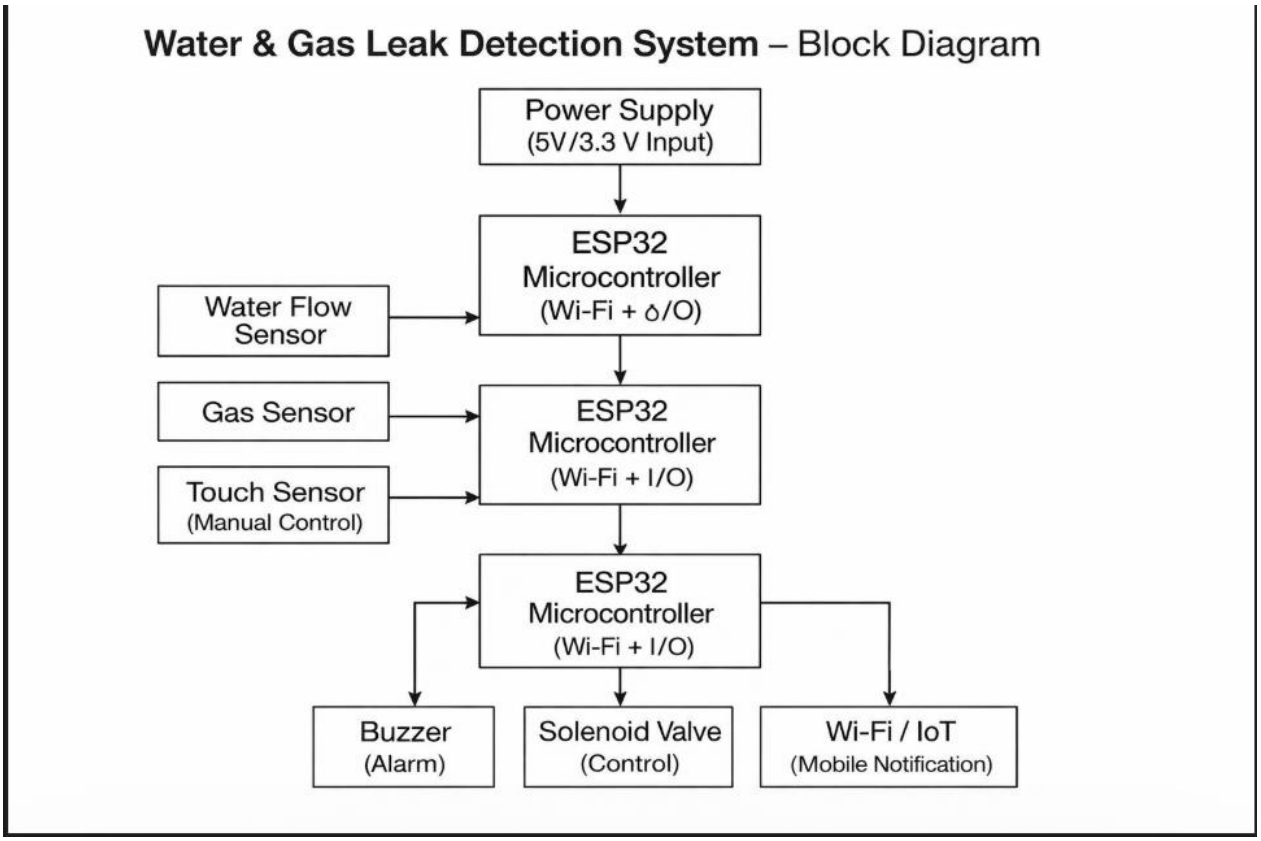

Fig 3.5 block diagram

3.6 IMPLEMENTATION STRATEGY

This chapter presented the overall design methodology of the Water Leak Detection System, covering both hardware and software aspects required for its successful implementation. It described how the system is structured using the ESP32 microcontroller as the central unit, along with sensors such

as the water flow sensor and gas sensor to monitor real-time conditions. The integration of components like the solenoid valve, buzzer, and touch sensor ensures that the system not only detects leaks but also takes immediate action and allows manual control when needed.

The chapter also explained the system requirements, hardware architecture, and software workflow in detail, highlighting how each component contributes to the overall functionality. The modular design approach makes the system flexible, scalable, and easy to maintain. Proper coordination between hardware and software ensures accurate detection, quick response, and reliable performance under different conditions.

Overall, the design methodology provides a strong foundation for building an efficient and cost-effective leak detection system. It ensures that the system meets the objectives of real-time monitoring, safety, and automation. This chapter sets the stage for the next phase, which involves the implementation, testing, and evaluation of the proposed system.

3.7 HARDWARE REQUIREMENTS

Component	Description
ESP32	Microcontroller used as the main processing unit. It reads sensor data, processes it, and controls output devices. It also

	supports Wi-Fi for IoT-based monitoring.
Water Flow Sensor	Used to measure the flow rate of water in pipelines. It helps detect abnormal flow conditions that may indicate leakage.
Gas Sensor	Detects the presence of harmful gases such as LPG or methane. It enhances system safety by identifying gas leaks
LEDs	Used to indicate system status such as motion detection or image capture.
Buzzer	Provides an audible alert when a leak or gas is detected, helping users take immediate action.
Touch Sensor	Used for manual control of the system, such as turning the system ON/OFF or resetting alerts.
Power Supply	Provides required voltage (5V/3.3V) to all components for stable system operation.
Solenoid Valve	Electrically controlled valve used to automatically stop water flow when a leak is detected

Table 3.7 : Components Overview

3.8 SOFTWARE REQUIREMENTS

Software	Purpose
Arduino IDE	Used for writing, compiling, and uploading code to the ESP32-DEV.

Table 3.8 : Software Used

3.9 CIRCUIT DIAGRAM

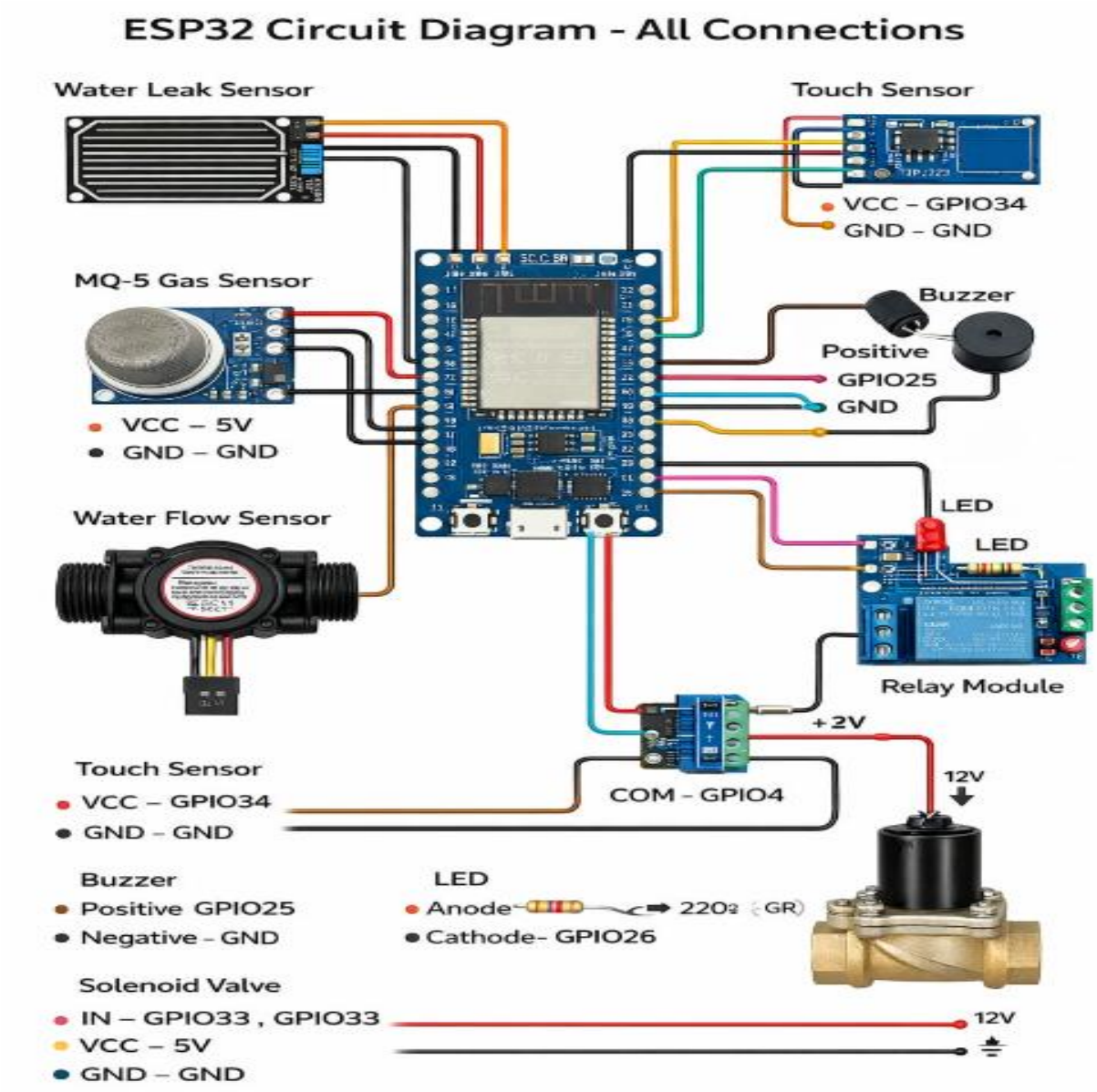

Fig 3.9 circuit diagram

3.10 SUMMARY

This chapter has provided a detailed account of the hardware components used in developing the Water and Gas Leak Detection System. The design of the hardware was carefully planned to ensure that the system is reliable, cost-effective, and capable of operating continuously in real-time environments. The primary motivation behind the hardware design was to create a system that can efficiently detect water leaks and gas leaks while also taking immediate action to prevent damage and ensure safety. The use of embedded systems and easily available components makes the system suitable for deployment in residential, commercial, and industrial settings, including areas with limited resources.

The chapter began by introducing the overall hardware configuration, which follows a modular and scalable approach. The ESP32 microcontroller serves as the core component, providing processing capability, connectivity, and control over all peripheral devices. Sensors such as the water flow sensor and gas sensor were selected based on their accuracy, affordability, and compatibility with the ESP32. These sensors continuously monitor environmental conditions and provide real-time input to the system. Additional components like the solenoid valve, buzzer, and touch sensor enhance the functionality by enabling automatic control, alert generation, and manual operation.

The hardware architecture was discussed in detail, explaining how each component is

interconnected to form a complete system. The ESP32 processes the signals received from sensors and makes decisions based on predefined conditions. When a leak or abnormal condition is detected, the system activates the buzzer to alert users and controls the solenoid valve to stop water flow, thereby preventing further damage. The touch sensor provides a user-friendly interface for manual control and system interaction. This integrated design ensures efficient communication between components while maintaining simplicity and reliability.

Overall, this chapter establishes a strong hardware foundation for the Water and Gas Leak Detection System. It demonstrates how the combination of sensors, control elements, and processing units can create an effective and responsive system. The hardware design ensures that the system meets its objectives of real-time detection, safety, and automation. This sets the stage for the next chapter, which will focus on software implementation, system integration, and performance evaluation.

CHAPTER 4
HARDWARE COMPONENTS

4.1 INTRODUCTION

The hardware components play a vital role in the development and functioning of the Water and Gas Leak Detection System. This chapter provides a detailed overview of all the physical components used in the system and explains their importance in achieving accurate detection and efficient operation. The hardware forms the backbone of the system, enabling real-time monitoring, data processing, and immediate response to hazardous conditions such as water leakage and gas leakage.

The system is designed using a combination of sensors, control units, and output devices that work together in a coordinated manner. The ESP32 microcontroller acts as the central processing unit, interfacing with sensors like the water flow sensor and gas sensor to collect real-time data. Based on the input received, the system performs necessary actions such as triggering alerts through a buzzer or controlling the solenoid valve to stop water flow. Additionally, a touch sensor is incorporated to allow manual control and user interaction with the system.

The selection of hardware components is based on factors such as reliability, cost-effectiveness, ease of integration, and compatibility with the overall system design. Each component is chosen to ensure accurate sensing, quick response, and efficient performance. The modular nature of the hardware design also allows for easy expansion and future enhancements. This chapter lays the foundation for

understanding how each component contributes to the overall functionality and effectiveness of the Water and Gas Leak Detection System.

4.2 ESP32-DEV MODULE

The ESP32 Development Module is the core component of the Water and Gas Leak Detection System, acting as the main processing and control unit. It is a powerful microcontroller developed by Espressif Systems, featuring a dual-core processor, built-in Wi-Fi, and Bluetooth capabilities. These features make it highly suitable for IoT-based applications, where real-time monitoring and remote communication are required. The ESP32 is capable of handling multiple tasks simultaneously, such as reading sensor data, processing inputs, and controlling output devices, making it an ideal choice for this project.

One of the key advantages of the ESP32 is its large number of General Purpose Input/Output (GPIO) pins, which allow easy interfacing with various sensors and actuators. In this project, the ESP32 is connected to components like the water flow sensor, gas sensor, touch sensor, buzzer, and solenoid valve. It continuously collects data from these sensors and processes it to detect abnormal conditions such as leaks. Based on the programmed logic, the ESP32 activates alerts or controls devices like the solenoid valve to prevent further damage. Its low power consumption and high processing speed ensure efficient and reliable system performance.

The ESP32 can be programmed using the Arduino IDE, which provides a user-friendly environment and access to a wide range of libraries. This simplifies the development process and allows easy debugging and testing. Additionally, its built-in Wi-Fi capability enables the system to send alerts and updates to users remotely, enhancing functionality and user convenience. Overall, the ESP32 Development Module serves as the brain of the system, coordinating all operations and ensuring smooth and efficient performance of the Water and Gas Leak Detection System.

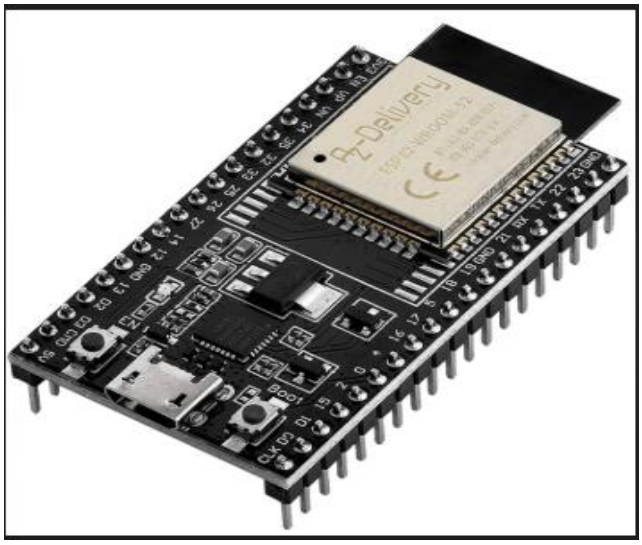

Fig-4.2 ESP-32 DEV

Connections**:**

The hardware design requires precise wiring to ensure optimal functionality:

• 5V / VIN Pin: Connects to a regulated 5V DC power supply to power the ESP32 module. A stable voltage source is

essential to ensure proper operation and to avoid unexpected resets or malfunctioning of connected components.

• GND (Ground**):** Acts as the common ground reference for the ESP32 and all connected peripherals. Proper grounding is necessary to maintain signal stability and ensure reliable communication between components.

• GPIO34 (Water Flow Sensor Input): This pin is used to read pulses from the water flow sensor. It helps in measuring the flow rate and detecting abnormal water usage that may indicate leakage.

• GPIO35 (Gas Sensor Input): Connected to the output of the gas sensor, this pin continuously monitors gas levels. If harmful gas is detected, the ESP32 processes the signal and triggers alerts.

• GPIO27 (Touch Sensor Input**):** Used to interface with the touch sensor for manual control. It allows users to turn the system ON/OFF or reset alerts when needed.

• GPIO25 (Buzzer Output): Configured as an output pin to control the buzzer. When a leak or gas is detected, this pin activates the buzzer to provide an audible warning.

• GPIO26 (Solenoid Valve Control)**:** Connected to the solenoid valve (via a relay module or driver circuit). This pin controls the opening and closing of the valve to stop water flow during leakage.

• GPIO2 (LED Indicator): Used to drive an LED for visual indication of system status such as normal operation, leak detection, or gas alert.

• TX (GPIO1) & RX (GPIO3)**:** Used for serial communication during programming and debugging through USB connection.

• EN (Enable Pin): Used to reset the ESP32 module. Pulling this pin LOW will reset the system.

Applications:

- Detects water leaks in homes to prevent damage and wastage
- Identifies gas leaks in residential kitchens for safety
- Monitors plumbing systems in commercial buildings
- Prevents industrial pipeline leakage and hazards

4.3 Water Leak Sensor

A water leak sensor is a crucial component in the Water Leak Detection System, designed to detect the presence of water in areas where it is not expected. It typically consists of conductive probes or traces that sense moisture when water comes into contact with them. When water bridges these conductive paths, the sensor generates a signal that is sent to the microcontroller (ESP32), indicating a leak condition. This allows the system to take immediate action, such as triggering an alarm or shutting off the water supply.

The working principle of a water leak sensor is based on conductivity. Under normal dry conditions,

there is no electrical connection between the sensor probes. However, when water is present, it completes the circuit, allowing current to flow and producing a detectable signal. Some sensors provide analog output to measure the level of moisture, while others provide a digital output indicating the presence or absence of water. This flexibility makes them suitable for a wide range of applications.

Water leak sensors are widely used due to their simplicity, low cost, and effectiveness. They can be placed near pipelines, water tanks, bathrooms, or any area prone to leakage. Proper placement is important to ensure accurate detection and avoid false alarms. Regular maintenance, such as cleaning the sensor probes, helps maintain performance and reliability. Overall, the water leak sensor plays a key role in ensuring early detection, preventing water wastage, and protecting infrastructure from damage.

Applications:

- Detects water leakage in household pipelines and bathrooms
- Monitors water tanks and storage systems for overflow or leaks
- Prevents damage in kitchens and washing areas
- Used in commercial buildings for plumbing system monitoring
- Helps in industrial pipeline leak detection
- Protects electrical equipment from water exposure

Fig-4.3 Water leak sensor(Resistive type)

4.4 MQ5 Gas Sensor

The MQ-5 gas sensor is widely used in gas detection systems to identify the presence of gases such as LPG, methane, propane, and natural gas. It is highly suitable for safety applications, especially in environments where gas leakage can lead to hazardous situations like fires or explosions. In the Water and Gas Leak Detection System, the MQ-5 sensor continuously monitors the surrounding air for gas concentration and sends signals to the ESP32 microcontroller when abnormal levels are detected.

The working principle of the MQ-5 sensor is based on a chemiresistive sensing mechanism. It contains a sensing material (typically tin dioxide, SnO_2) whose electrical resistance changes when exposed to combustible gases.

Under normal conditions, the sensor maintains a stable resistance, but when gas is present, the resistance decreases, resulting in a change in output voltage. This variation is read by the ESP32, which then processes the data and triggers alerts such as activating a buzzer or sending notifications.

The MQ-5 sensor provides both analog and digital outputs, making it flexible for different applications. It requires a preheating time to stabilize its readings and ensure accurate detection. The sensor is cost-effective, easy to interface with microcontrollers, and widely used in gas leakage detection systems for homes, industries, and laboratories. Proper calibration and placement are important to avoid false readings and ensure reliable performance.

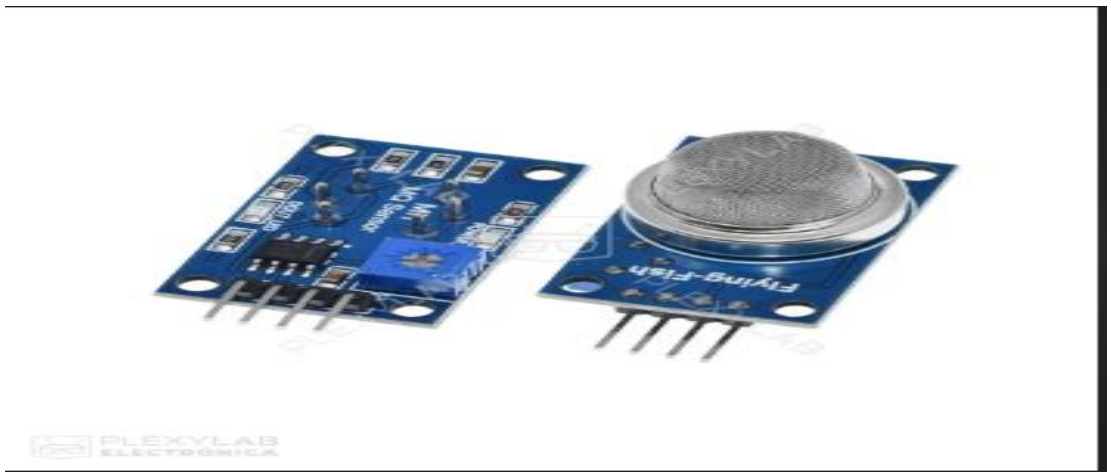

Fig 4.4 MQ-5 Gas Sensor

Applications

- Detects LPG gas leakage in homes and kitchens
- Used in gas leakage alarm systems for safety
- Monitors industrial gas pipelines and storage units
- Ensures safety in restaurants and commercial kitchens
- Used in vehicles to detect gas leaks in fuel systems
- Applied in laboratories for detecting hazardous

4.5 WATER FLOW SENSOR

A water flow sensor is an essential component used to measure the flow rate of water in pipelines and detect irregularities that may indicate leakage. It typically consists of a rotor with a built-in magnet and a Hall-effect sensor. As water flows through the sensor, the rotor spins, generating pulses. The frequency of these pulses is directly proportional to the flow rate, which is then read and processed by the ESP32 microcontroller.

The working principle of the water flow sensor is based on the Hall-effect. When water passes through the sensor, it rotates the internal turbine, and the attached magnet creates a magnetic field that is detected by the Hall sensor. This generates electrical pulses, and by counting these pulses over time, the system can calculate the flow rate and total volume of water passing through the pipe. Any abnormal flow pattern, such as continuous flow when none is expected, can indicate a leak.

Water flow sensors are widely used due to their accuracy,

reliability, and ease of integration. They are commonly installed in pipelines, water supply systems, and irrigation setups. Proper installation and calibration are important to ensure accurate readings. These sensors play a crucial role in monitoring water usage, detecting leaks, and improving overall water management efficiency

Fig 4.5 Water Flow Sensor

Applications:

- Measures water flow in household pipelines
- Detects leakage in plumbing systems
- Monitors water usage in commercial buildings
- Used in industrial fluid flow monitoring

4.6 TOUCH SENSOR

A touch sensor is an input device used to detect physical touch or proximity without the need for mechanical buttons. In the Water and Gas Leak Detection System, the touch sensor is used for manual control, such as turning the system ON/OFF or resetting alerts. It operates based on capacitive

sensing, where it detects changes in capacitance when a human finger comes close to or touches the sensor surface.

The working principle of a touch sensor involves measuring the electrical charge on a conductive surface. When a person touches the sensor, the capacitance changes due to the human body's natural conductivity. This change is detected by the sensor circuitry and converted into a digital signal, which is then sent to the ESP32 microcontroller. The ESP32 processes this input and performs the required action based on the programmed logic.

Touch sensors are widely used due to their reliability, durability, and ease of use. Unlike mechanical switches, they have no moving parts, which reduces wear and tear and increases lifespan. They are also compact, energy-efficient, and easy to interface with microcontrollers. In this project, the touch sensor enhances user interaction by providing a simple and convenient way to control the system manually.

Fig 4.6 Touch Sensor

4.7 SOLENOID VALVE

A solenoid valve is an electromechanical device used to control the flow of liquids or gases in a pipeline. In the Water and Gas Leak Detection System, the solenoid valve plays a crucial role in automatically stopping the flow of water when a leak is detected. This helps prevent further water wastage and reduces potential damage to property. The valve operates by converting electrical energy into mechanical motion, allowing it to open or close the flow path.

The working principle of a solenoid valve is based on electromagnetic induction. It consists of a coil, a plunger, and a valve body. When an electric current passes through the coil, it generates a magnetic field that moves the plunger, either opening or closing the valve. When the current is turned off, the plunger returns to its original position with the help of a spring, restoring the flow. In this project, the ESP32 controls the solenoid valve (usually through a relay or driver circuit) based on the sensor inputs.

Solenoid valves are widely used because they provide fast response, reliable operation, and easy automation. They are commonly found in water supply systems, irrigation setups, industrial processes, and safety systems. Proper installation and correct voltage supply are important for efficient functioning. In this system, the solenoid valve enhances

automation by enabling immediate action during leak detection, making the system more effective and efficient

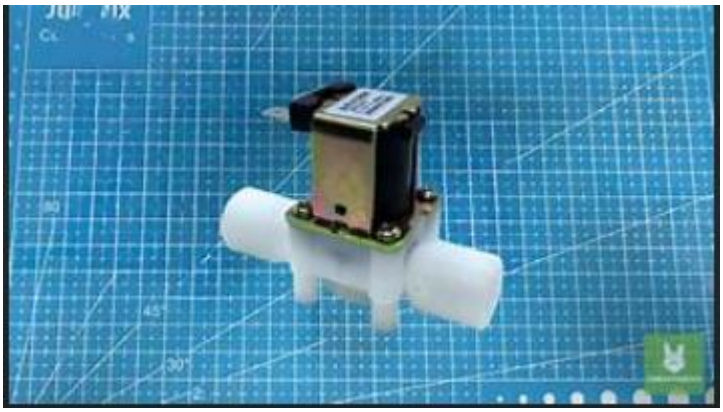

Fig 4.7 SOLENOID VALVE

CHAPTER 5
RESULT AND CONCLUSION

5.1 RESULT

The Water and Gas Leak Detection System was successfully designed, implemented, and tested to achieve the objectives defined during the initial phase of the project. The system was evaluated based on parameters such as leak detection accuracy, response time, reliability, power consumption, and system stability. By integrating the ESP32 microcontroller with components such as the water flow sensor, gas sensor, solenoid valve, buzzer, and touch sensor, the system demonstrated efficient and autonomous

operation without requiring continuous human monitoring.

During testing, the water flow sensor effectively monitored the flow of water in pipelines and detected abnormal conditions that could indicate leakage. Similarly, the gas sensor successfully identified the presence of harmful gases such as LPG and methane within its detection range. Upon detecting any abnormal condition, the ESP32 responded with minimal delay by activating the buzzer to alert users and controlling the solenoid valve to automatically stop the water supply. This immediate response significantly reduces the risk of damage and enhances safety.

The touch sensor provided an additional layer of control by allowing manual operation of the system, such as resetting alerts or controlling system states. The system was powered using a stable power supply, ensuring uninterrupted operation. Testing was conducted under different environmental conditions, including variations in water flow and gas exposure levels, to evaluate system performance and reliability.

In all test scenarios, the system performed effectively, with high detection accuracy and quick response time. The water leak detection and gas sensing mechanisms operated reliably, and the solenoid valve responded correctly to control water flow. The buzzer provided clear and immediate alerts, ensuring user awareness. Power consumption remained within acceptable limits, making the system suitable for continuous operation and long-term

deployment.

Furthermore, the ESP32 was successfully programmed using the Arduino IDE, and the system maintained stable performance throughout testing. The built-in Wi-Fi capability of the ESP32 also allows future integration with IoT platforms for remote monitoring and alert notifications. Although IoT functionality was not the primary focus of this implementation, its successful testing indicates strong potential for further enhancement.

Overall, the system achieved its intended goals by providing a cost-effective, reliable, and efficient solution for detecting water and gas leaks. The results validate the effectiveness of the design and demonstrate its suitability for real-world applications in residential, commercial, and industrial environments.

5.2 CONCLUSION

The Water and Gas Leak Detection System developed in this project successfully achieves its goal of providing a reliable, efficient, and cost-effective solution for detecting water and gas leaks in real time. By integrating the ESP32 microcontroller with sensors such as the water flow sensor and gas sensor, along with components like the solenoid valve, buzzer, and touch sensor, the system is capable of continuously monitoring environmental conditions and responding immediately to abnormal situations. This helps in preventing water wastage, reducing damage to infrastructure, and enhancing overall safety.

The system demonstrates high accuracy and quick response in detecting leaks, making it suitable for various applications including residential, commercial, and industrial environments. The automatic control feature of the solenoid valve ensures that water flow is stopped instantly when a leak is detected, while the buzzer provides immediate alerts to users. The inclusion of a touch sensor allows manual control, improving user interaction and system flexibility. Additionally, the use of ESP32 enables future expansion with IoT-based monitoring and remote alert systems.

Overall, the project highlights the importance of smart monitoring systems in modern infrastructure. It provides a practical approach to resource conservation and safety management using embedded systems and sensor technology. The system is scalable, easy to implement, and adaptable for future enhancements such as mobile applications, cloud integration, and advanced analytics. Thus, the Water and Gas Leak Detection System proves to be an effective solution for addressing real-world challenges related to leakage detection and prevention.

5.3 CODE

```
#include <WiFi.h>
#include <WebServer.h>

// WiFi credentials
const char* ssid = "Vyshnavi";
```

```
const char* password = "87654321";

// Web server
WebServer server(80);

// Pin connections
int leakSensor = 34;
int gasSensor = 35;
int flowSensor = 27;
int touchPin = 4;
int buzzer = 25;
int led = 26;
int valve = 33;

// Flow variables
volatile int pulseCount = 0;
float flowRate = 0.0;
unsigned long lastTime = 0;

// States
bool valveState = true;
bool lastTouchState = LOW;

// ------------------- INTERRUPT -------------------
void IRAM_ATTR countPulse()
{
  pulseCount++;
}

// ------------------- WEBPAGE -------------------
```

```
void handleRoot()
{
  int leak = digitalRead(leakSensor);
  int gas = analogRead(gasSensor);

  String page = "<html><head>";
  page += "<title>Smart Water Monitoring</title>";
  page += "<meta http-equiv='refresh' content='2'>";
  page += "</head><body>";

  page += "<h1>SMART WATER DETECTION SYSTEM</h1>";

  page += "<h3>Water Leak Status: ";
  if(leak == 1)
    page += "<span style='color:red;'>Leak Detected</span>";
  else
    page += "<span style='color:green;'>No Leak</span>";
  page += "</h3>";

  page += "<h3>Gas Level: ";
  page += gas;
  page += "</h3>";

  page += "<h3>Water Flow Rate: ";
  page += flowRate;
  page += " L/min</h3>";

  page += "<h3>Valve Status: ";
  page += (valveState ? "OPEN" : "CLOSED");
  page += "</h3>";
```

```
  page += "<br><br>";
  page += "<a href=\"/open\"><button style='font-size:20px'>Open Valve</button></a> ";
  page += "<a href=\"/close\"><button style='font-size:20px'>Close Valve</button></a>";

  page += "</body></html>";

  server.send(200, "text/html", page);
}

// ------------------- VALVE CONTROL -------------------
void handleOpen()
{
  valveState = true;
  digitalWrite(valve, HIGH);
  server.sendHeader("Location", "/");
  server.send(303);
}

void handleClose()
{
  valveState = false;
  digitalWrite(valve, LOW);
  server.sendHeader("Location", "/");
  server.send(303);
}

// ------------------- SETUP -------------------
```

```
void setup()
{
  Serial.begin(115200);

  pinMode(leakSensor, INPUT_PULLUP);
  pinMode(gasSensor, INPUT);
  pinMode(flowSensor, INPUT_PULLUP);
  pinMode(touchPin, INPUT_PULLDOWN);   // ✅ FIXED
  pinMode(buzzer, OUTPUT);
  pinMode(led, OUTPUT);
  pinMode(valve, OUTPUT);

  digitalWrite(valve, HIGH);

  attachInterrupt(digitalPinToInterrupt(flowSensor),
countPulse, RISING);

  // WiFi
  WiFi.begin(ssid, password);
  Serial.print("Connecting to WiFi");

  while(WiFi.status() != WL_CONNECTED)
  {
    delay(500);
    Serial.print(".");
  }

  Serial.println("\nWiFi Connected");
  Serial.print("Open this in browser: http://");
  Serial.println(WiFi.localIP());
```

```
  server.on("/", handleRoot);
  server.on("/open", handleOpen);
  server.on("/close", handleClose);

  server.begin();
}

// ------------------- LOOP -------------------
void loop()
{
  server.handleClient();

  int leak = digitalRead(leakSensor);
  int gas = analogRead(gasSensor);
  int touch = digitalRead(touchPin);

  //  Flow calculation
  if(millis() - lastTime > 1000)
  {
    noInterrupts();
    flowRate = pulseCount / 7.5;
    pulseCount = 0;
    interrupts();
    lastTime = millis();
  }

  //  Touch toggle valve
  if(touch == HIGH && lastTouchState == LOW)
  {
```

```
  valveState = !valveState;
  digitalWrite(valve, valveState ? HIGH : LOW);
  delay(300); // debounce
}
lastTouchState = touch;

Serial.print("Leak: ");
Serial.print(leak);
Serial.print(" | Gas: ");
Serial.print(gas);
Serial.print(" | Flow: ");
Serial.print(flowRate);
Serial.print(" | Touch: ");
Serial.println(touch);

// Leak detection
if(leak == 1)
{
  digitalWrite(buzzer, HIGH);
  digitalWrite(led, HIGH);
  digitalWrite(valve, LOW);
  valveState = false;
}
else
{
  digitalWrite(buzzer, LOW);
  digitalWrite(led, LOW);

  if(valveState)
    digitalWrite(valve, HIGH);
```

```
  }

  // Gas alert
  if(gas > 1500)
  {
    digitalWrite(buzzer, HIGH);
    digitalWrite(led, HIGH);
  }

  delay(200);
}
```

5.4 PROJECT

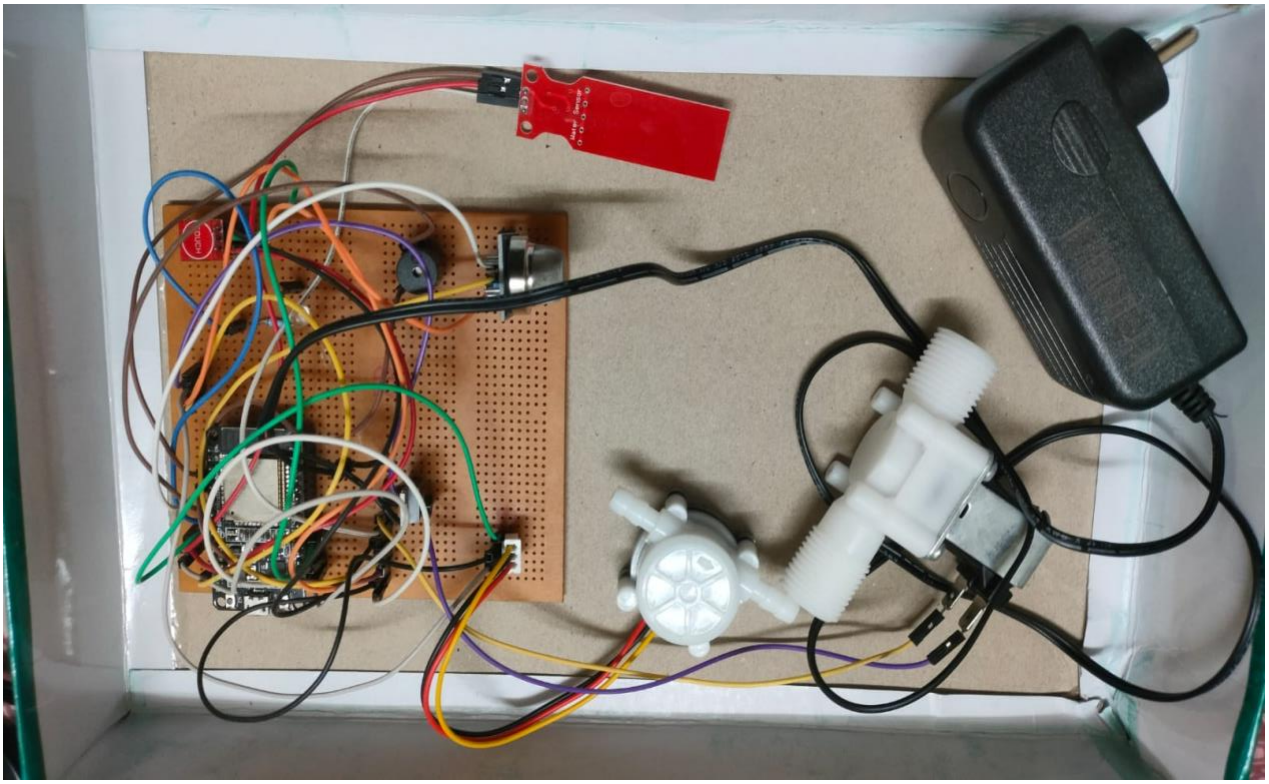

Fig 5.4 project

5.5 OUTPUT

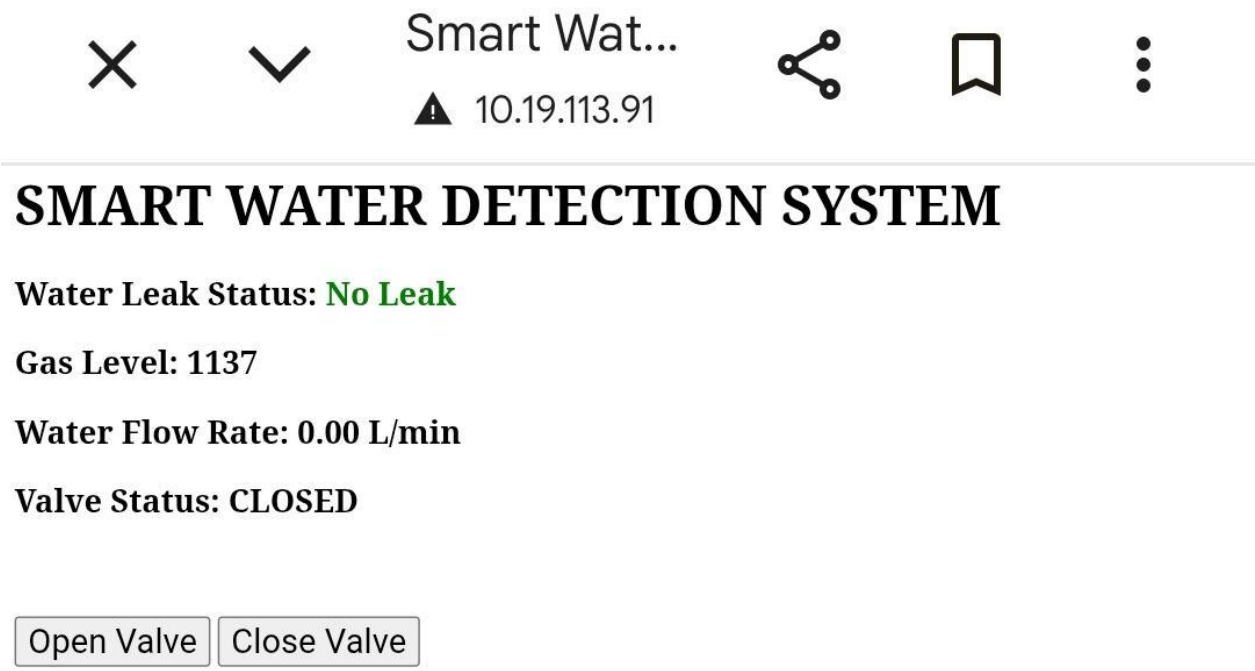

Fig 5.5 output

5.6 LIMITATIONS OF THE SYSTEM

The Water and Gas Leak Detection System, while effective and reliable, has certain limitations that can impact its overall performance in specific situations. One of the primary limitations is its dependence on a continuous power supply; any interruption in power can temporarily halt the system's operation. Additionally, the accuracy of sensors such as the water flow sensor and gas sensor can be affected by environmental conditions like temperature, humidity, and dust. These factors may lead to inaccurate readings, resulting in false alarms or failure to detect minor leaks. The water flow

sensor, in particular, may not be sensitive enough to detect very small or slow leakages, which could go unnoticed.

Another limitation is related to the gas sensor, which requires proper calibration and a preheating period to function accurately. Without proper calibration, the sensor may produce inconsistent results. The effectiveness of the system also depends on proper sensor placement; incorrect positioning can reduce detection efficiency. Moreover, the solenoid valve requires an external driver or relay circuit and consumes additional power, which may not be ideal for low-power applications. The system currently lacks advanced features such as predictive analysis, data logging, and full IoT integration, which could enhance its functionality.

5.7 FUTURE SCOPE

The Water and Gas Leak Detection System can be further enhanced by integrating advanced technologies to improve its functionality, efficiency, and user convenience. One of the major future improvements is the integration of IoT capabilities, allowing the system to send real-time alerts and notifications to users through mobile applications or web platforms. This would enable remote monitoring and control, making the system more user-friendly and effective in preventing damage even when the user is not physically present.

Another significant enhancement could be the incorporation of cloud storage and data logging features. By storing sensor data over time, the system can analyze patterns

in water usage and gas levels, helping in early detection of potential issues. The use of machine learning algorithms can further improve the system by enabling predictive analysis, which can identify possible leaks before they occur. This would transform the system from a reactive to a proactive solution.

The system can also be expanded by adding more sensors such as temperature, humidity, or pressure sensors to increase accuracy and reliability. Integration of a mobile application with a user-friendly interface can provide better control, including options to manually operate the solenoid valve or reset alerts remotely. Additionally, the system can be made more energy-efficient by incorporating battery backup or solar power solutions, making it suitable for remote and rural areas.

Overall, the future scope of this project is vast, with opportunities to enhance automation, intelligence, and connectivity. and large-scale infrastructure, contributing to better resource management and safety.

REFERENCES

1. Espressif Systems, *ESP32 Datasheet and Technical Reference Manual*, Available: https://www.espressif.com
2. Arduino Documentation, *Arduino IDE and ESP32 Programming Guide*, Available: https://www.arduino.cc

3. MQ-5 Gas Sensor Datasheet, *Gas Sensor Specifications and Working Principle*
4. Water Flow Sensor (YF-S201) Datasheet, *Flow Measurement and Pulse Output Characteristics*
5. Capacitive Touch Sensor Module Documentation
6. Solenoid Valve Technical Datasheet and Application Notes
7. IEEE Research Papers on *IoT-based Leak Detection Systems*
8. Research Article: *Smart Water Leak Detection Using IoT*, International Journal of Engineering Research
9. Books:
   - "Embedded Systems Design" by Steve Heath
   - "Internet of Things: A Hands-On Approach" by Arshdeep Bahga and Vijay Madisetti
10. Online Tutorials and Resources:

- Random Nerd Tutorials (ESP32 Projects)
- Electronics Hub (Sensor Interfacing Guides)
- Circuit Digest (IoT-Based Project